野火_XC7A35T/100T/200T核心板_原理图_V1.0

目录

Page 1	目录
Page 2	历史版本
Page 3	Block Diagram
Page 4	PCB叠层
Page 5	电源
Page 6	BTB连接器
Page 7	Bank0
Page 8	Bank13/Bank14
Page 9	Bank15/Bank16
Page 10	Bank34/Bank35
Page 11	Bank216
Page 12	IO_POWER/CORE_POWER
Page 13	DDR3
Page 14	SPI_FLASH/Crystal

东莞野火电子技术有限公司
https://yehuosm.tmall.com

Title: 野火_XC7A35T核心板_原理图

Size: A4 | Document Number: 目录 | Rev: V1.0

Date: Saturday, December 05, 2020 | Sheet 1 of 14

历史版本

版本号	日期	设计	描述
V1.0	2020-09-29	xgh	初始版本
V1.0	2021-03-05	xgh	整理资料发布，稳定版

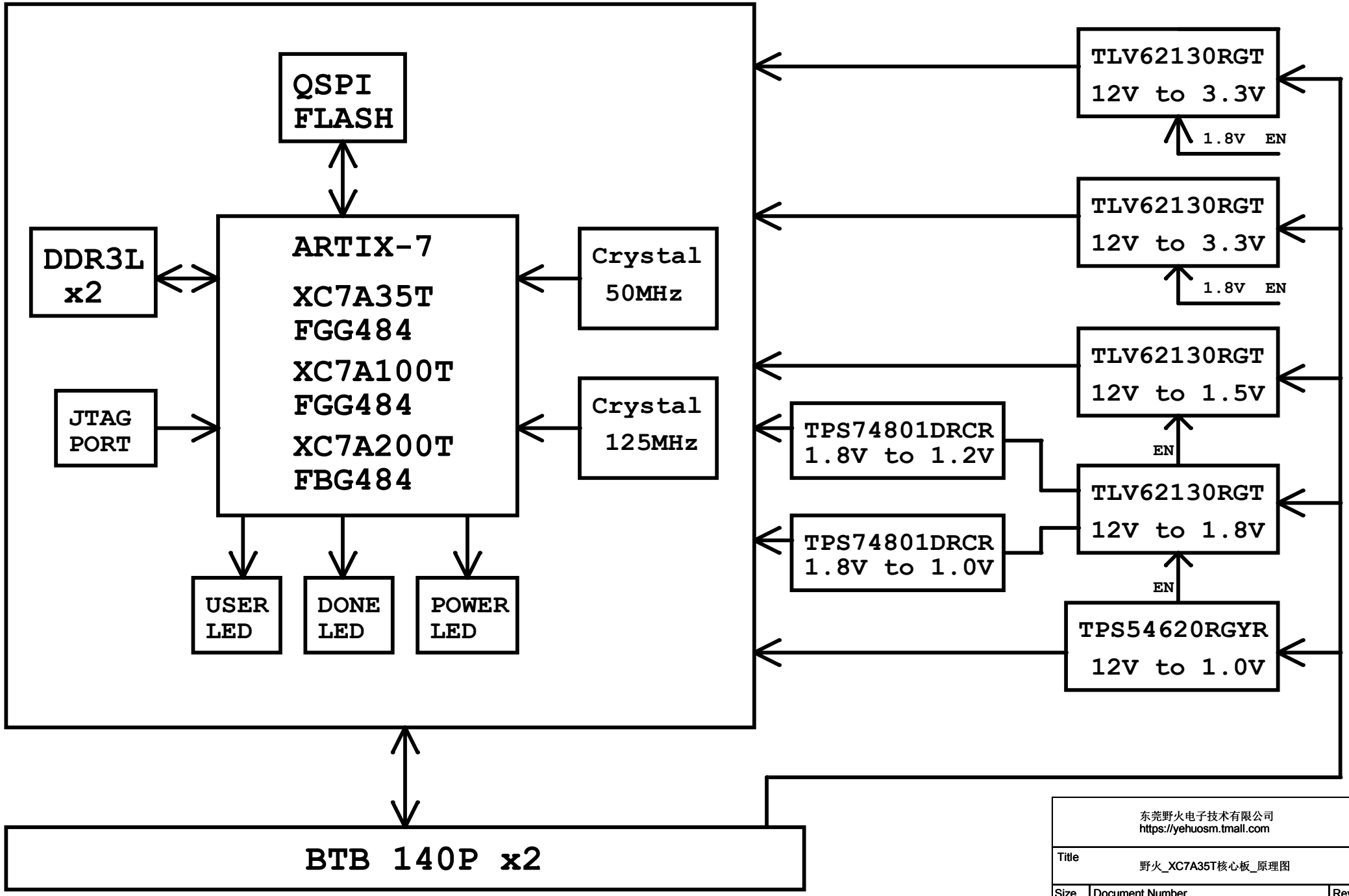

东莞野火电子技术有限公司
https://yehuosm.tmall.com

Title	野火_XC7A35T核心板_原理图	
Size A4	Document Number Block Diagram	Rev V1.0
Date: Saturday, December 05, 2020	Sheet 3 of 14	

ebf_xc7a35t/100t/200t core board

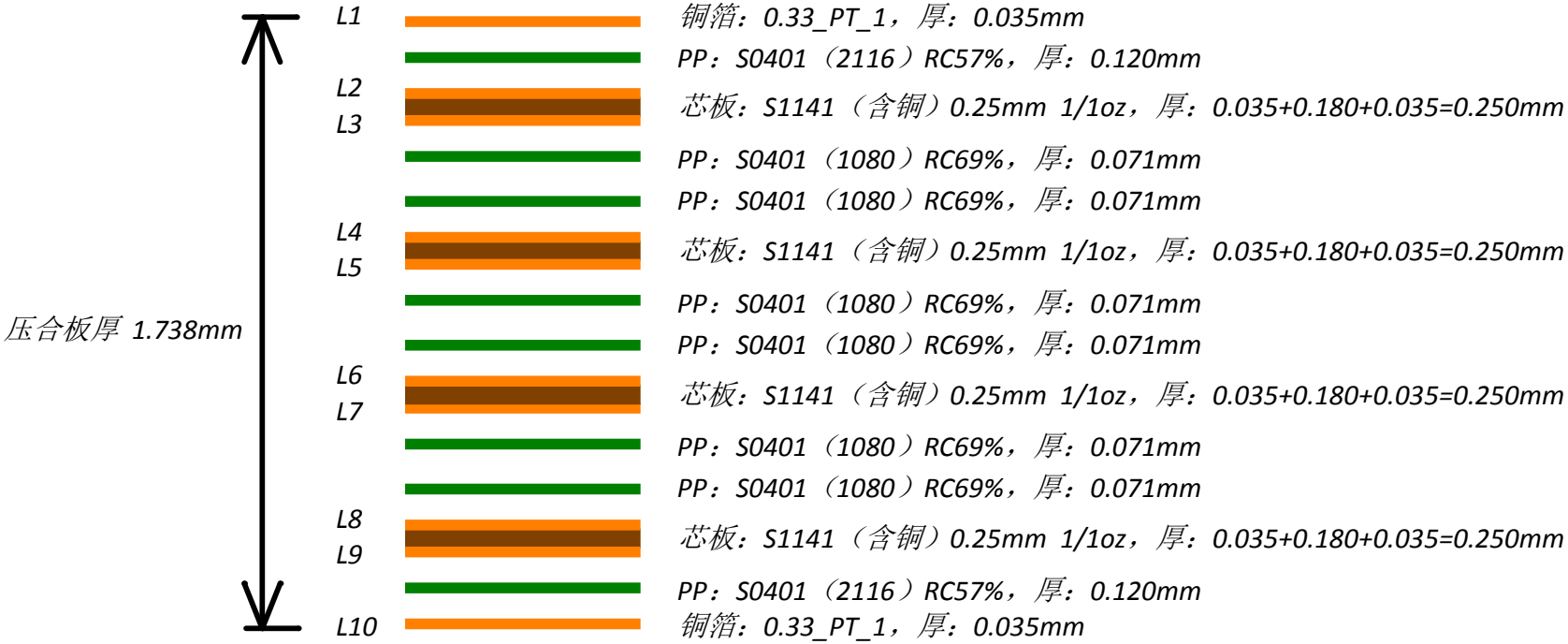

东莞野火电子技术有限公司 https://yehuosm.tmall.com		
Title	野火_XC7A35T核心板_原理图	
Size A4	Document Number 历史版本	Rev V1.0
Date: Saturday, December 05, 2020	Sheet 4 of 14	

POWER 5V~12V

POWER 1.0V

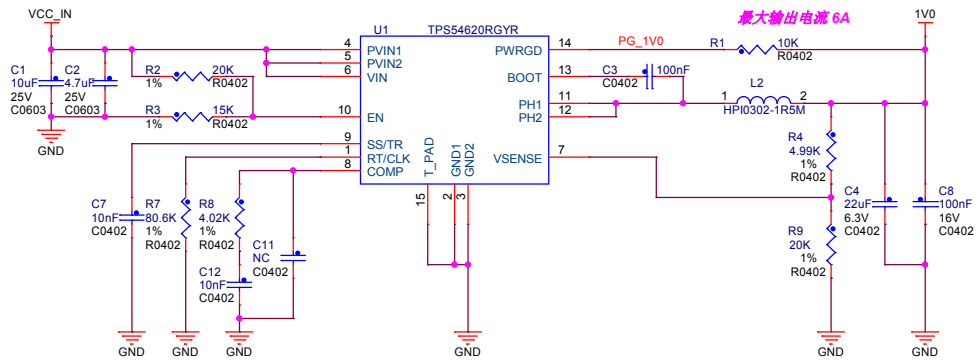

POWER 1.8V

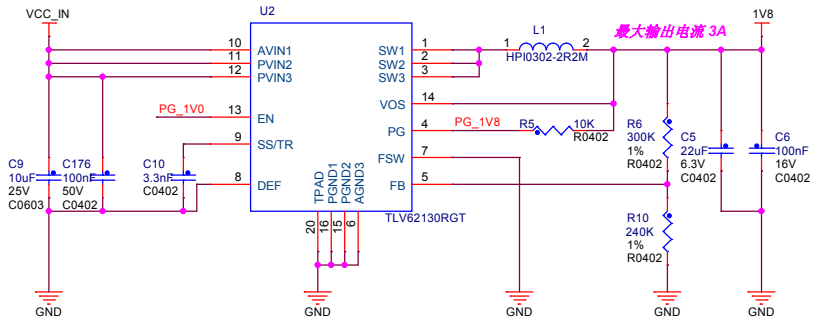

POWER 1.5V

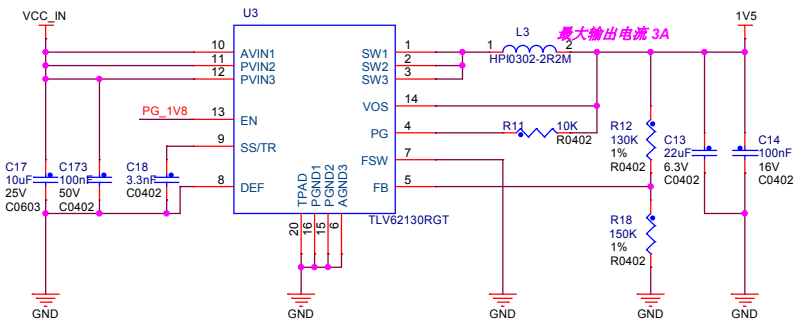

POWER 3.3V

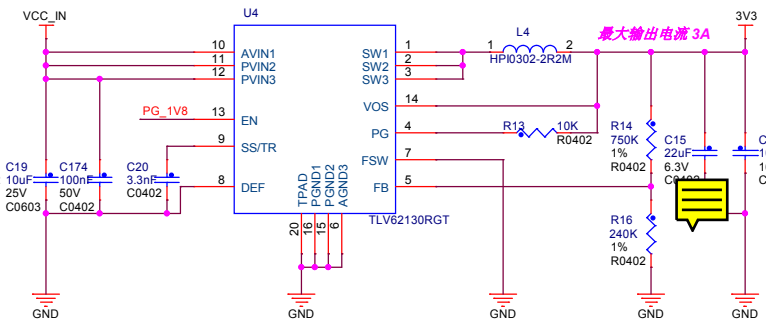

POWER 1.2V

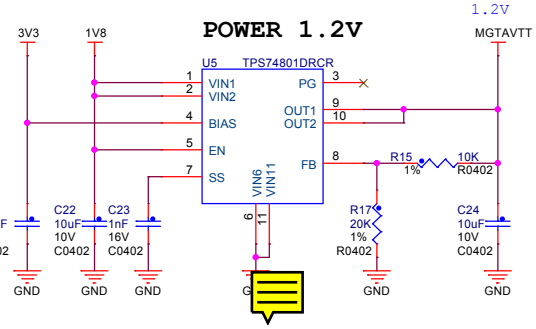

1.0V->1.8V->1.5V&3.3V&VCCIO

POWER 3.3V

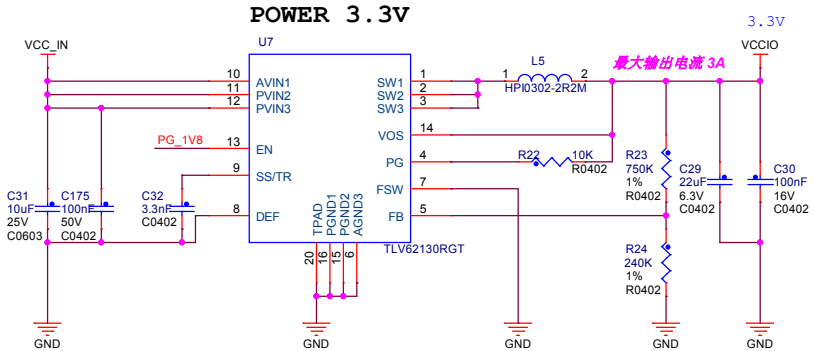

POWER_LED

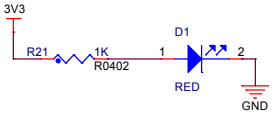

定位孔

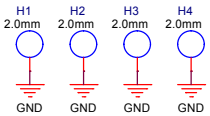

POWER 1.0V

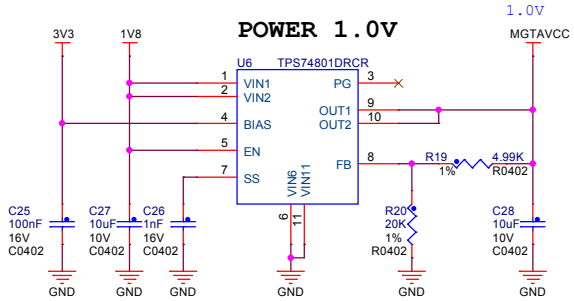

东莞野火电子技术有限公司 https://yehuosm.tmall.com		
Title	野火_XC7A35T核心板_原理图	
Size A3	Document Number 电源	Rev V1.0
Date: Saturday, December 05, 2020	Sheet 5 of 14	

BTB连接器

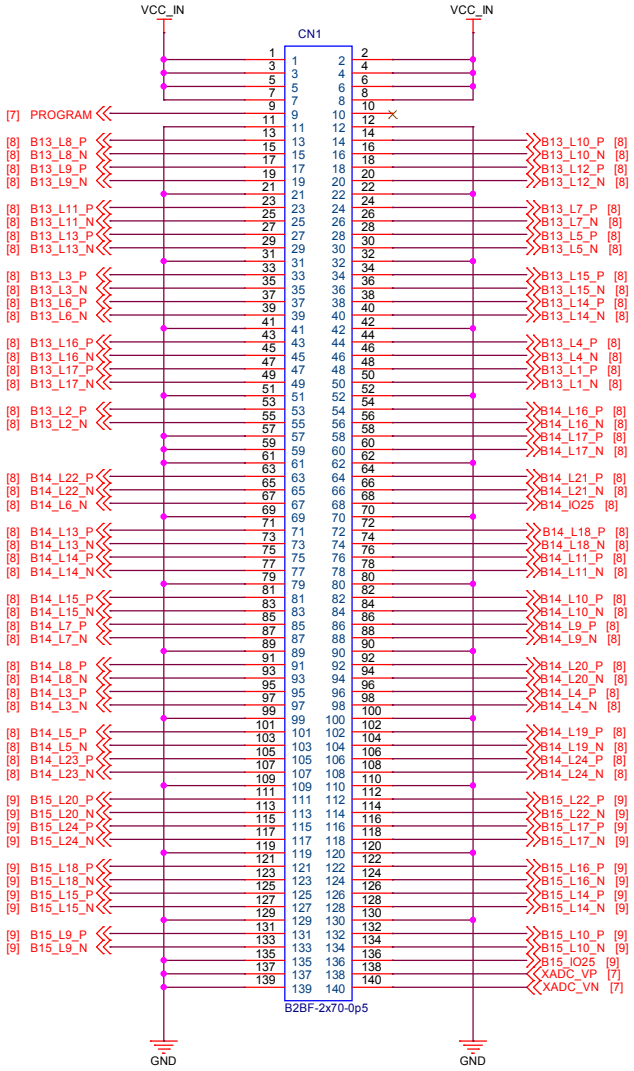

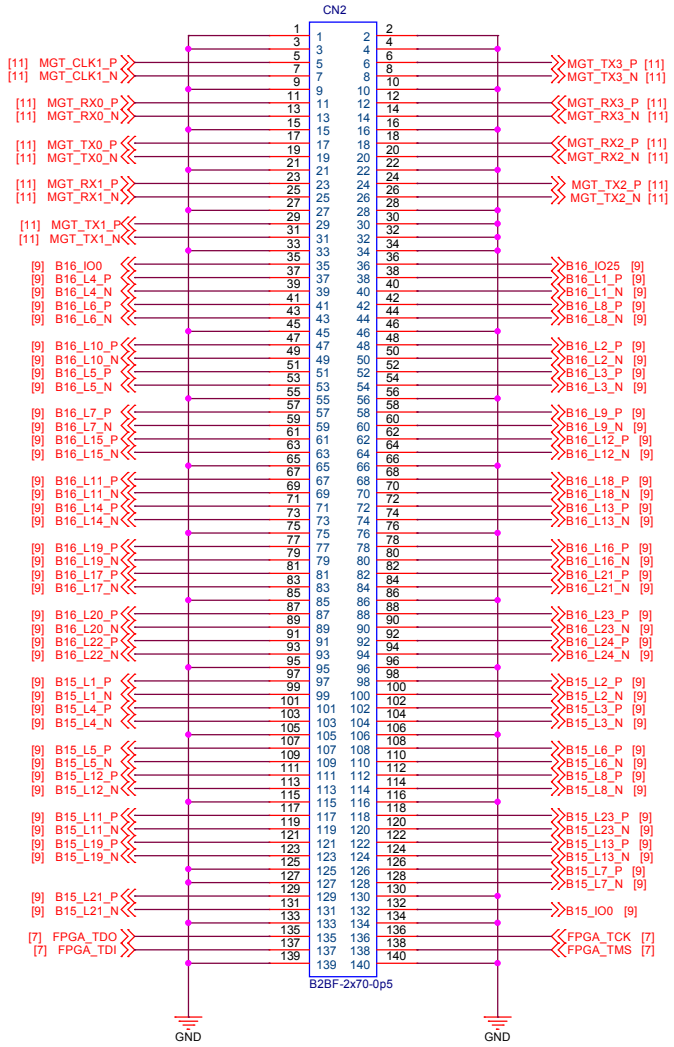

东莞野火电子技术有限公司 https://yehuosm.tmall.com		
Title	野火_XC7A35T核心板_原理图	
Size A3	Document Number BTB连接器	Rev V1.0
Date: Saturday, December 05, 2020	Sheet 6 of 14	

BANK0

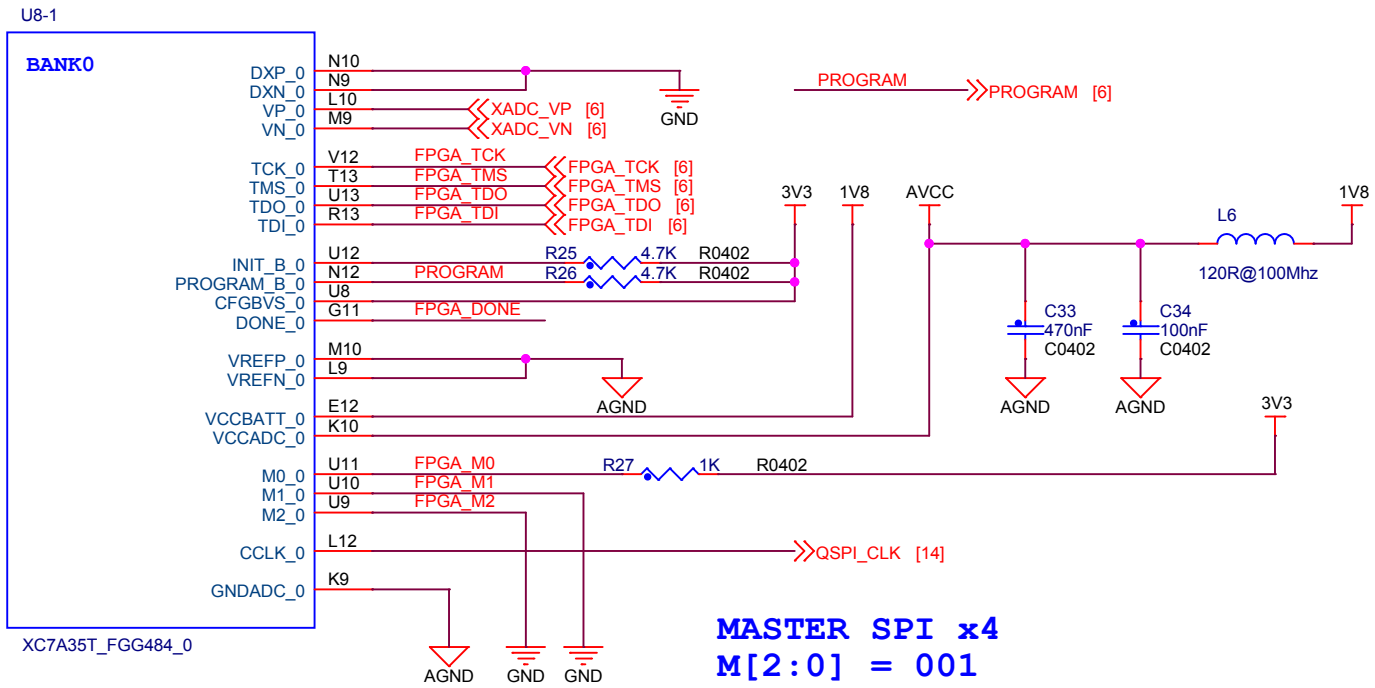

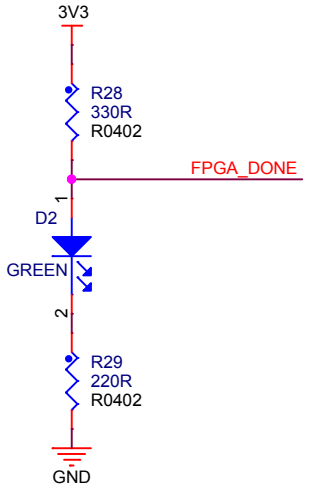

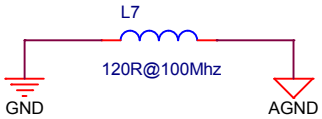

东莞野火电子技术有限公司 https://yehuosm.tmall.com		
Title	野火_XC7A35T核心板_原理图	
Size A4	Document Number BANK0	Rev V1.0
Date: Saturday, December 05, 2020	Sheet 7 of 14	

BANK13/14

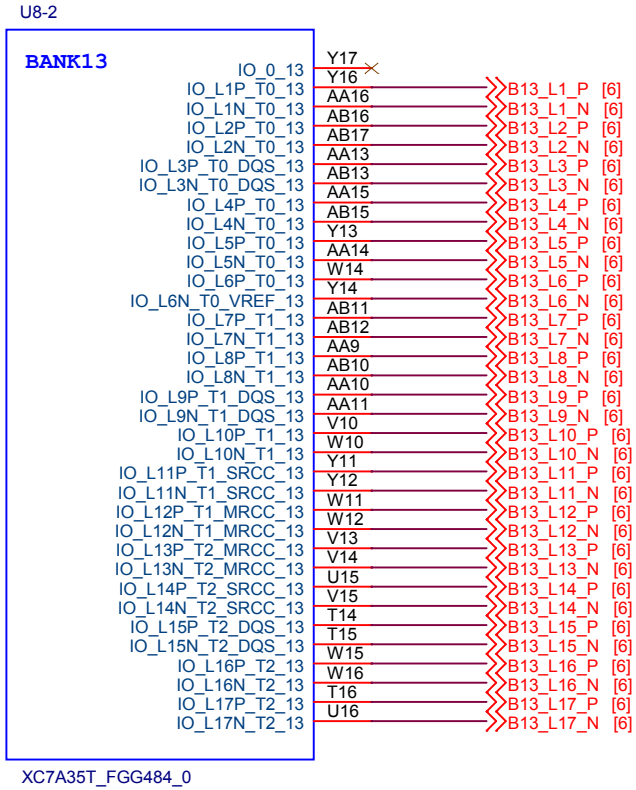

XC7A35T无BANK13
XC7A100T/XC7A200T有BANK13

USER_LED

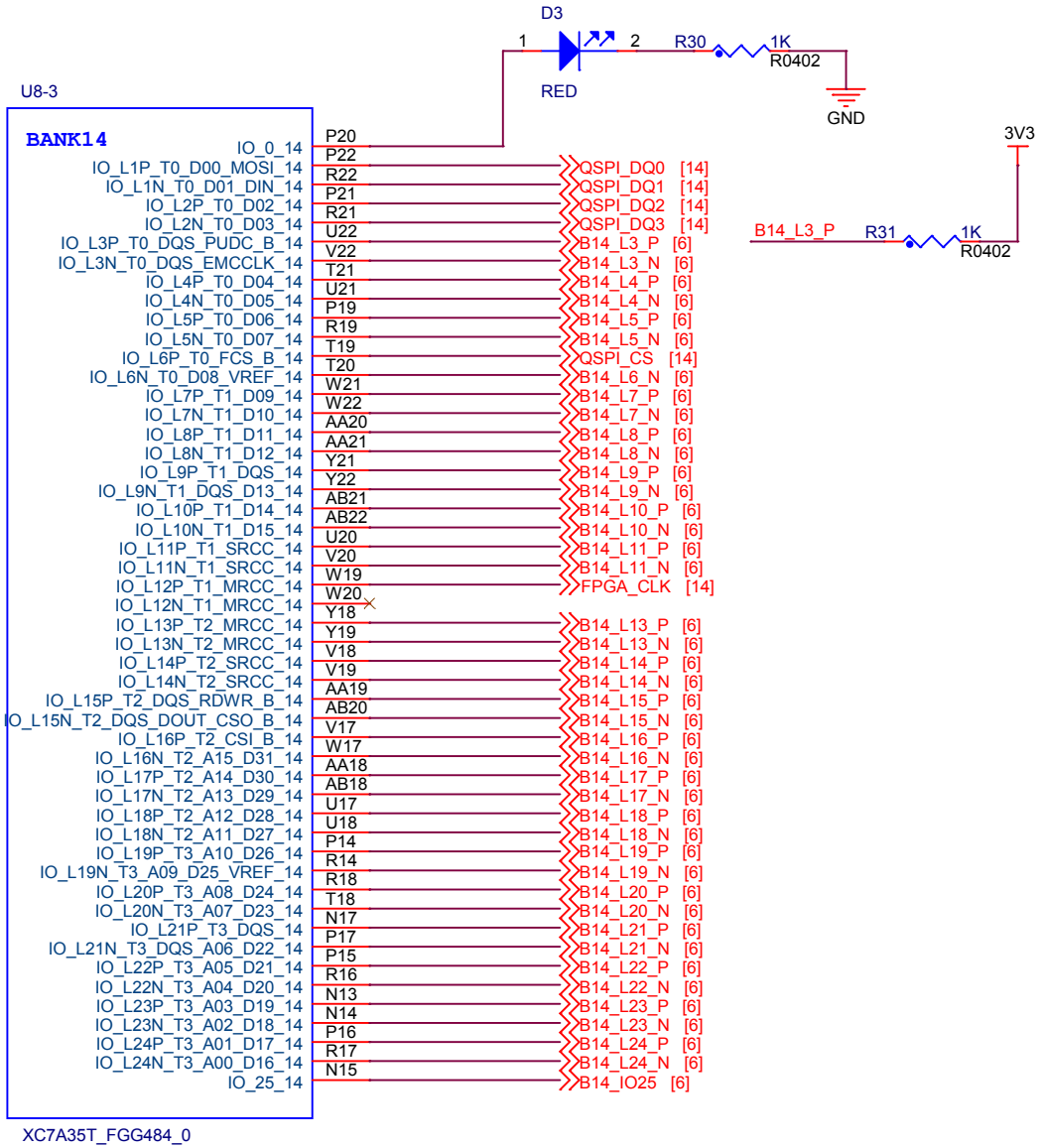

东莞野火电子技术有限公司 https://yehuosm.tmall.com		
Title	野火_XC7A35T核心板_原理图	
Size A4	Document Number BANK34/BANK35/BANK13	Rev V1.0
Date: Saturday, December 12, 2020	Sheet 8 of 14	

BANK15/16

U8-4

BANK15

IO_0_15	J16	B15_IO0 [6]
IO_L1P_T0_AD0P_15	H13	B15_L1_P [6]
IO_L1N_T0_AD0N_15	G13	B15_L1_N [6]
IO_L2P_T0_AD8P_15	G15	B15_L2_P [6]
IO_L2N_T0_AD8N_15	G16	B15_L2_N [6]
IO_L3P_T0_DQS_AD1P_15	J14	B15_L3_P [6]
IO_L3N_T0_DQS_AD1N_15	H14	B15_L3_N [6]
IO_L4P_T0_15	G17	B15_L4_P [6]
IO_L4N_T0_15	G18	B15_L4_N [6]
IO_L5P_T0_AD9P_15	J15	B15_L5_P [6]
IO_L5N_T0_AD9N_15	H15	B15_L5_N [6]
IO_L6P_T0_15	H17	B15_L6_P [6]
IO_L6N_T0_VREF_15	H18	B15_L6_N [6]
IO_L7P_T1_AD2P_15	J22	B15_L7_P [6]
IO_L7N_T1_AD2N_15	H22	B15_L7_N [6]
IO_L8P_T1_AD10P_15	H20	B15_L8_P [6]
IO_L8N_T1_AD10N_15	G20	B15_L8_N [6]
IO_L9P_T1_DQS_AD3P_15	K21	B15_L9_P [6]
IO_L9N_T1_DQS_AD3N_15	K22	B15_L9_N [6]
IO_L10P_T1_AD11P_15	M21	B15_L10_P [6]
IO_L10N_T1_AD11N_15	L21	B15_L10_N [6]
IO_L11P_T1_SRCC_15	J20	B15_L11_P [6]
IO_L11N_T1_SRCC_15	J21	B15_L11_N [6]
IO_L12P_T1_MRCC_15	J19	B15_L12_P [6]
IO_L12N_T1_MRCC_15	H19	B15_L12_N [6]
IO_L13P_T2_MRCC_15	K18	B15_L13_P [6]
IO_L13N_T2_MRCC_15	K19	B15_L13_N [6]
IO_L14P_T2_SRCC_15	L19	B15_L14_P [6]
IO_L14N_T2_SRCC_15	L20	B15_L14_N [6]
IO_L15P_T2_DQS_15	N22	B15_L15_P [6]
IO_L15N_T2_DQS_ADV_B_15	M22	B15_L15_N [6]
IO_L16P_T2_A28_15	M18	B15_L16_P [6]
IO_L16N_T2_A27_15	L18	B15_L16_N [6]
IO_L17P_T2_A26_15	N18	B15_L17_P [6]
IO_L17N_T2_A25_15	N19	B15_L17_N [6]
IO_L18P_T2_A24_15	N20	B15_L18_P [6]
IO_L18N_T2_A23_15	M20	B15_L18_N [6]
IO_L19P_T3_A22_15	K13	B15_L19_P [6]
IO_L19N_T3_A21_VREF_15	K14	B15_L19_N [6]
IO_L20P_T3_A20_15	M13	B15_L20_P [6]
IO_L20N_T3_A19_15	L13	B15_L20_N [6]
IO_L21P_T3_DQS_15	K17	B15_L21_P [6]
IO_L21N_T3_DQS_A18_15	J17	B15_L21_N [6]
IO_L22P_T3_A17_15	L14	B15_L22_P [6]
IO_L22N_T3_A16_15	L15	B15_L22_N [6]
IO_L23P_T3_FOE_B_15	L16	B15_L23_P [6]
IO_L23N_T3_FWE_B_15	K16	B15_L23_N [6]
IO_L24P_T3_RS1_15	M15	B15_L24_P [6]
IO_L24N_T3_RS0_15	M16	B15_L24_N [6]
IO_25_15	M17	B15_IO25 [6]

XC7A35T_FGG484_0

U8-5

BANK16

IO_0_16	F15	B16_IO0 [6]
IO_L1P_T0_16	F13	B16_L1_P [6]
IO_L1N_T0_16	F14	B16_L1_N [6]
IO_L2P_T0_16	F16	B16_L2_P [6]
IO_L2N_T0_16	E17	B16_L2_N [6]
IO_L3P_T0_DQS_16	C14	B16_L3_P [6]
IO_L3N_T0_DQS_16	C15	B16_L3_N [6]
IO_L4P_T0_16	E13	B16_L4_P [6]
IO_L4N_T0_16	E14	B16_L4_N [6]
IO_L5P_T0_16	E16	B16_L5_P [6]
IO_L5N_T0_16	D16	B16_L5_N [6]
IO_L6P_T0_16	D14	B16_L6_P [6]
IO_L6N_T0_VREF_16	D15	B16_L6_N [6]
IO_L7P_T1_16	B15	B16_L7_P [6]
IO_L7N_T1_16	B16	B16_L7_N [6]
IO_L8P_T1_16	C13	B16_L8_P [6]
IO_L8N_T1_16	B13	B16_L8_N [6]
IO_L9P_T1_DQS_16	A15	B16_L9_P [6]
IO_L9N_T1_DQS_16	A16	B16_L9_N [6]
IO_L10P_T1_16	A13	B16_L10_P [6]
IO_L10N_T1_16	A14	B16_L10_N [6]
IO_L11P_T1_SRCC_16	B17	B16_L11_P [6]
IO_L11N_T1_SRCC_16	B18	B16_L11_N [6]
IO_L12P_T1_MRCC_16	D17	B16_L12_P [6]
IO_L12N_T1_MRCC_16	C17	B16_L12_N [6]
IO_L13P_T2_MRCC_16	C18	B16_L13_P [6]
IO_L13N_T2_MRCC_16	C19	B16_L13_N [6]
IO_L14P_T2_SRCC_16	E19	B16_L14_P [6]
IO_L14N_T2_SRCC_16	D19	B16_L14_N [6]
IO_L15P_T2_DQS_16	F18	B16_L15_P [6]
IO_L15N_T2_DQS_16	E18	B16_L15_N [6]
IO_L16P_T2_16	B20	B16_L16_P [6]
IO_L16N_T2_16	A20	B16_L16_N [6]
IO_L17P_T2_16	A18	B16_L17_P [6]
IO_L17N_T2_16	A19	B16_L17_N [6]
IO_L18P_T2_16	F19	B16_L18_P [6]
IO_L18N_T2_16	F20	B16_L18_N [6]
IO_L19P_T3_16	D20	B16_L19_P [6]
IO_L19N_T3_VREF_16	C20	B16_L19_N [6]
IO_L20P_T3_16	C22	B16_L20_P [6]
IO_L20N_T3_16	B22	B16_L20_N [6]
IO_L21P_T3_DQS_16	B21	B16_L21_P [6]
IO_L21N_T3_DQS_16	A21	B16_L21_N [6]
IO_L22P_T3_16	E22	B16_L22_P [6]
IO_L22N_T3_16	D22	B16_L22_N [6]
IO_L23P_T3_16	E21	B16_L23_P [6]
IO_L23N_T3_16	D21	B16_L23_N [6]
IO_L24P_T3_16	G21	B16_L24_P [6]
IO_L24N_T3_16	G22	B16_L24_N [6]
IO_25_16	F21	B16_IO25 [6]

XC7A35T_FGG484_0

东莞野火电子技术有限公司
https://yehuosm.tmall.com

Title	野火_XC7A35T核心板_原理图	
Size A4	Document Number BANK500/BANK501	Rev V1.0
Date: Thursday, December 10, 2020	Sheet 9 of 14	

BANK34/35

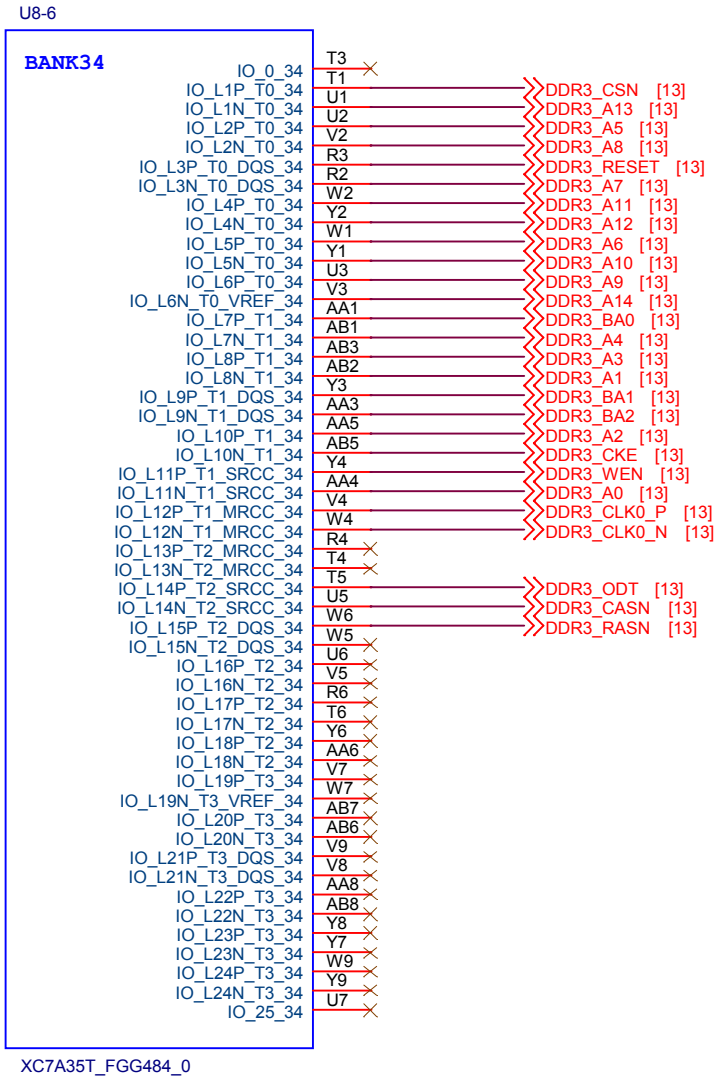

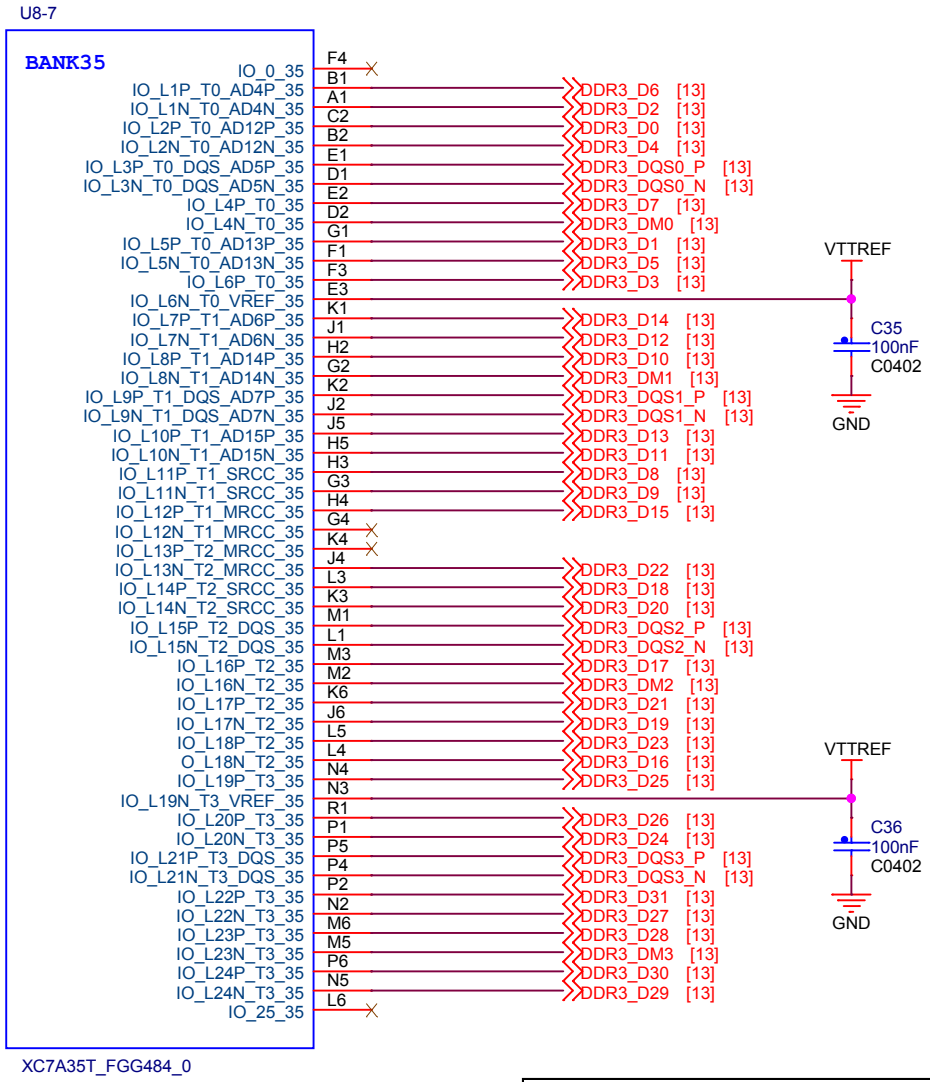

东莞野火电子技术有限公司 https://yehuosm.tmall.com		
Title	野火_XC7A35T核心板_原理图	
Size A4	Document Number BANK502	Rev V1.0
Date: Thursday, December 10, 2020	Sheet 10 of 14	

BANK216

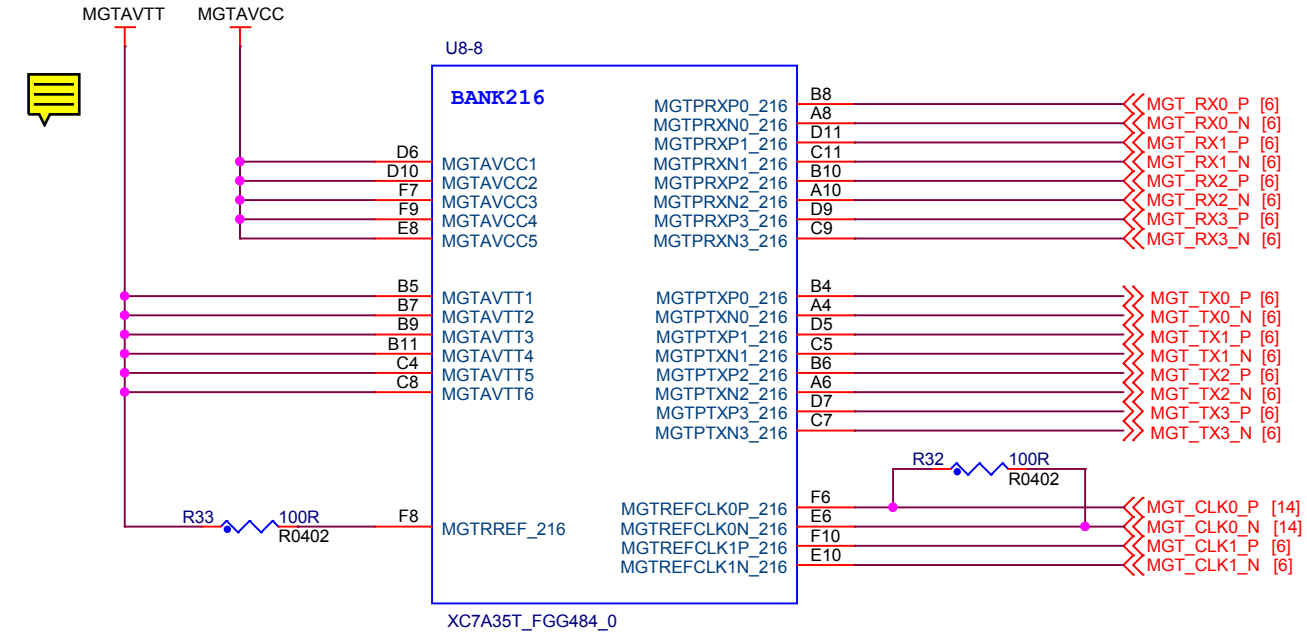

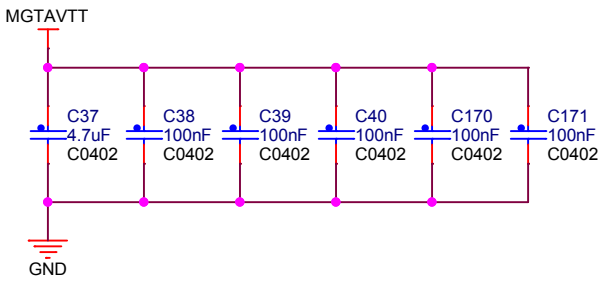

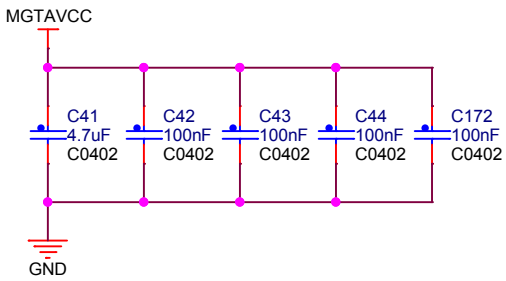

东莞野火电子技术有限公司 https://yehuosm.tmall.com		
Title	野火_XC7A35T核心板_原理图	
Size A4	Document Number BANK502	Rev V1.0
Date: Saturday, December 05, 2020	Sheet 11 of 14	

IO_POWER/CORE_POWER

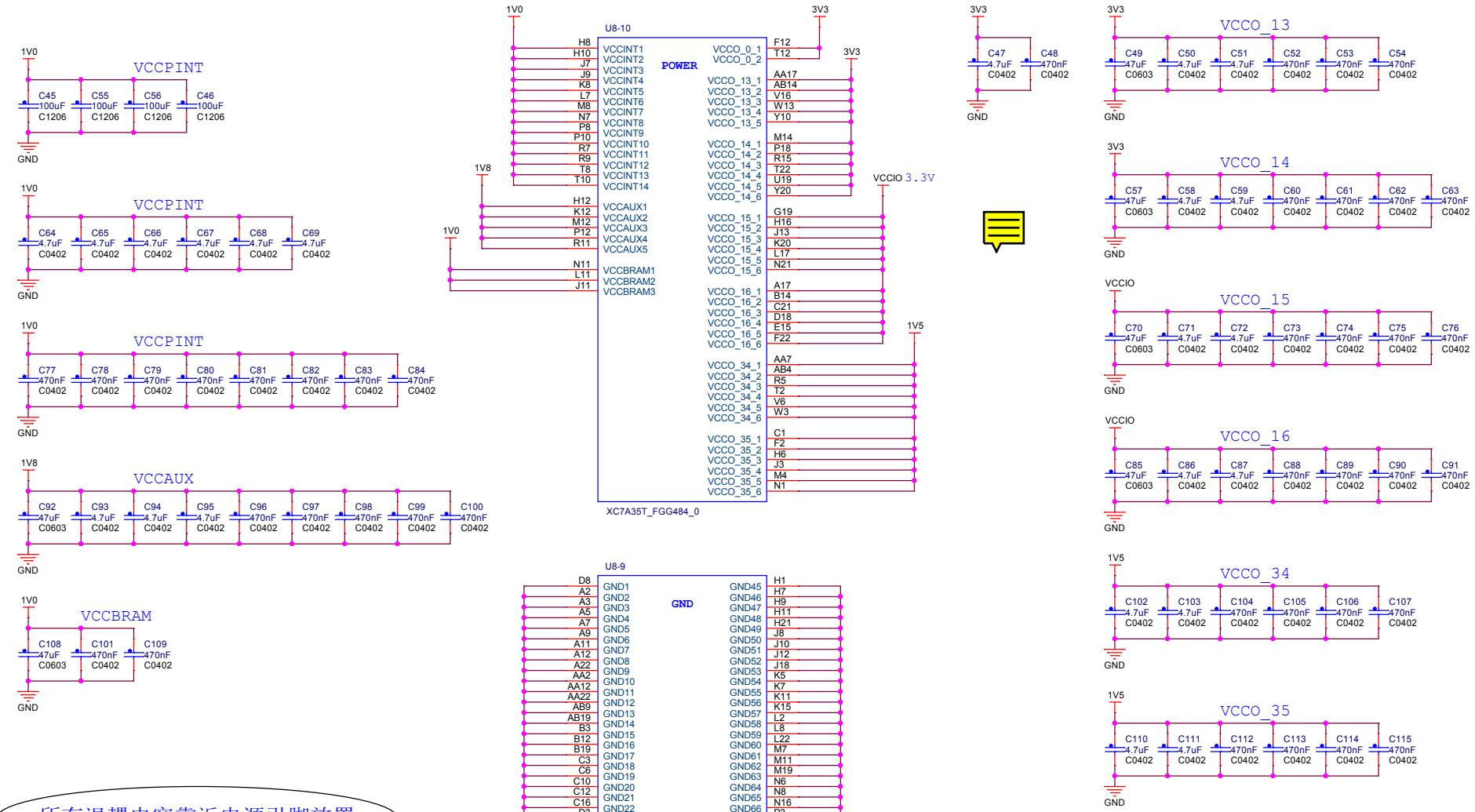

所有退耦电容靠近电源引脚放置

东莞野火电子技术有限公司 https://yehuosm.tmall.com		
Title	野火_XC7A35T核心板_原理图	
Size A3	Document Number BOOT	Rev V1.0
Date: Saturday, December 05, 2020	Sheet 12 of 14	

DDR3L

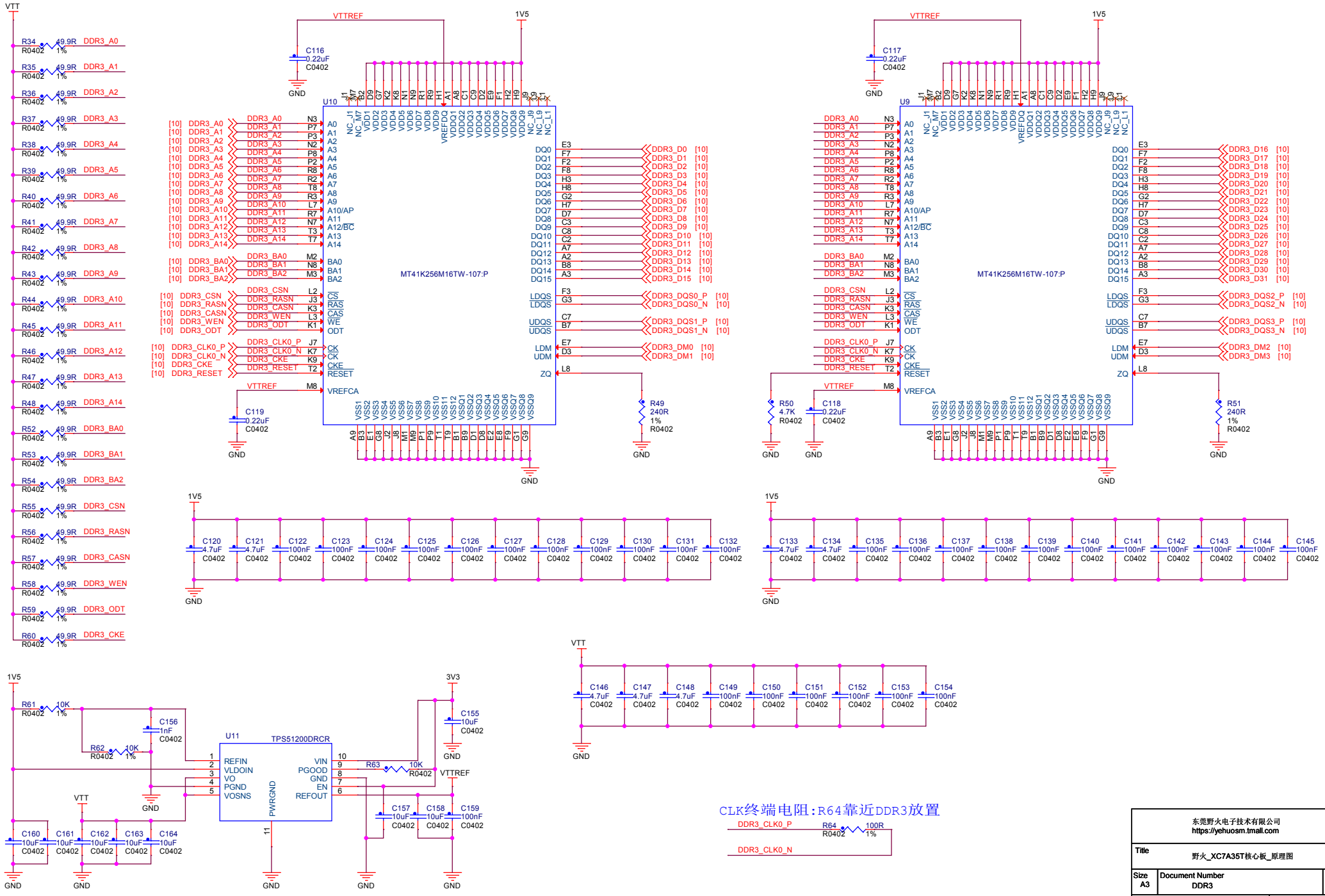

东莞野火电子技术有限公司 https://yehuosm.tmall.com	
Title	野火_XC7A35T核心板_原理图
Size A3	Document Number DDR3
Rev V1.0	
Date: Saturday, December 05, 2020	Sheet 13 of 14

CLOCK

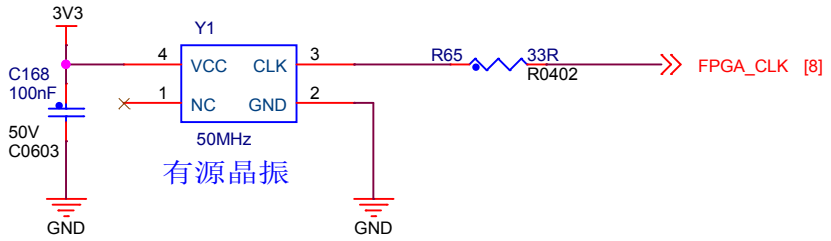

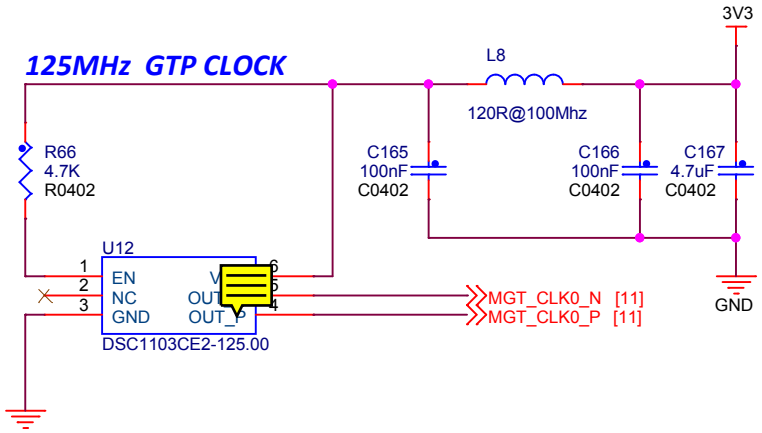

SPI_FLASH

容量：16M字节

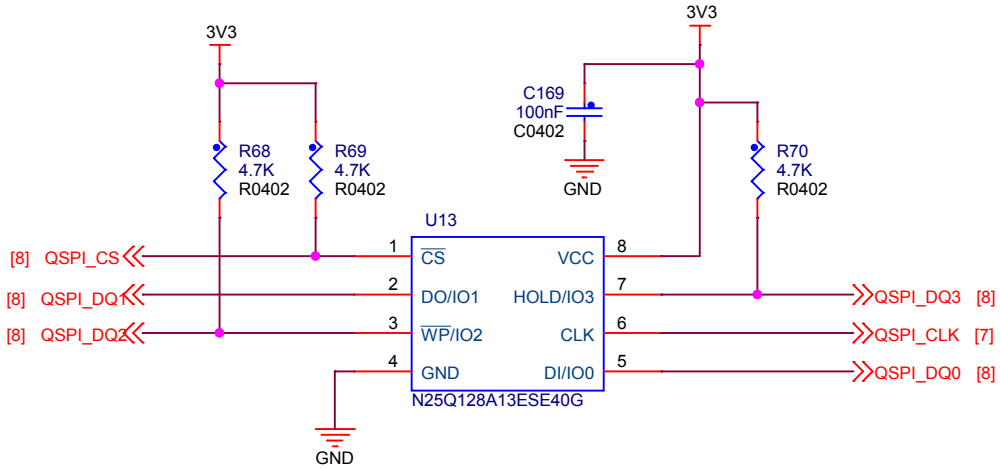

东莞野火电子技术有限公司 https://yehuosm.tmall.com		
Title	野火_XC7A35T核心板_原理图	
Size A4	Document Number SPI_FLASH/Crystal	Rev V1.0
Date: Saturday, December 12, 2020	Sheet 14 of 14	